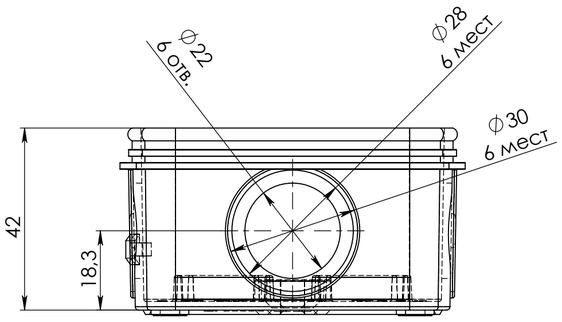

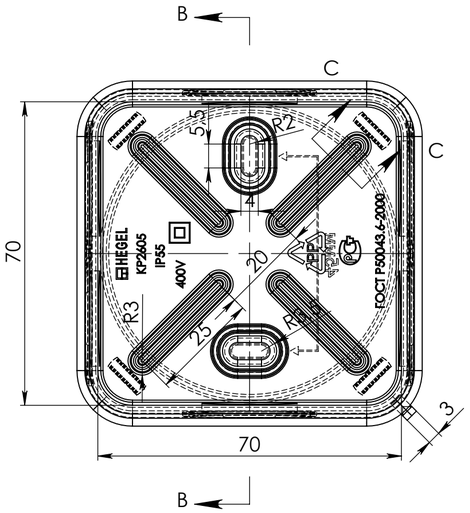

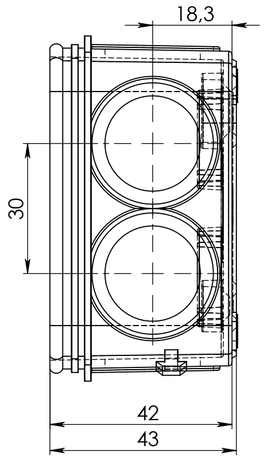

A

ВИД А
МАСШТАБ 1 : 1

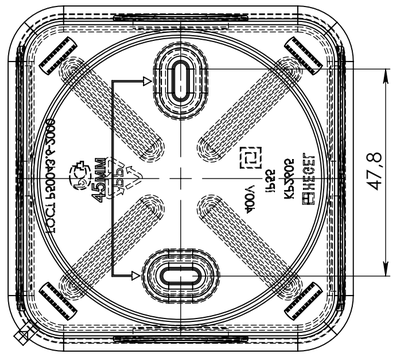

СЕЧЕНИЕ В-В
МАСШТАБ 1 : 1

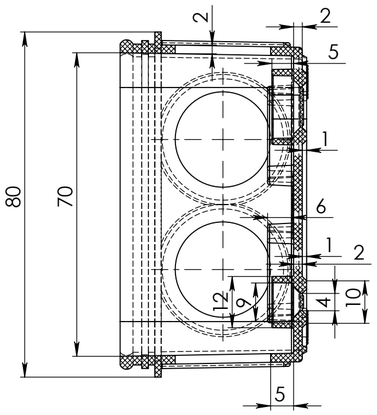

СЕЧЕНИЕ С
МАСШТАБ 2 : 1

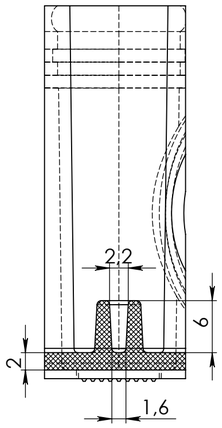

UNLESS OTHERWISE SPECIFIED: DIMENSIONS ARE IN MILLIMETERS SURFACE FINISH: TOLERANCES: LINEAR: ANGULAR:	FINISH:			DEBUR AND BREAK SHARP EDGES	DO NOT SCALE DRAWING	REVISION
	NAME	SIGNATURE	DATE		TITLE:	
DRAWN						
CHK'D						
APPV'D						
MFG						
Q.A				MATERIAL:	DWG NO. **KP2605**	A2
				WEIGHT:	SCALE:1:2	SHEET 1 OF 1